Powered by invermac TECHNOLOGY

inverFLOW PLUS

Installation Manual

PLEASE READ THE MANUAL CAREFULLY BEFORE INSTALLATION & OPERATION AND RETAIN IT FOR FUTURE REFERENCE.

Adherence to the directions for use in this manual is extremely important for health and safety. Failure to strictly adhere to the requirements in this manual may result in personal injury, property damage and affect your ability to make a claim under the manufacturer's warranty provided with your product. Products must be used, installed and operated in accordance with this manual. You may not be able to claim on the manufacturer's warranty in the event that your product fault is due to failure to adhere to this manual.

1. IMPORTANT SAFETY INSTRUCTIONS

This guide provides installation and operation instructions for this pump. If you have any other questions about this equipment, please consult your supplier.

1.1 When installing and using this electrical equipment, basic safety precautions should always be followed, including the following:

RISK OF ELECTRICAL SHOCK.
Pool pump must be installed on a RCD protected circuit. Check your local state regulations and wiring rules.

This water pump must be earthed in accordance with local and national regulations. Earthing point is clearly labelled on pump

This pump is for use with permanently installed in-ground or above-ground swimming pools and may also be used with hot tubs and spas with a water temperature under 50°C. Due to the fixed installation method, this pump is not suggested to be used on above-ground pools that can be readily disassembled for storage.

The pump is not submersible.

Never open the inside of the drive motor enclosure.

1.2 All installations must be fitted with earth leakage or residual current protection devices, having a rated residual operating current not exceeding 30mA.

Fill the pump with water before starting. Do not run the pump dry. In case of dry run, mechanical seal will be damaged and the pump will start leaking.

Before servicing the pump, switch OFF power to the pump by disconnecting the main circuit to the pump and release all pressure from pump and piping system.

Never tighten or loosen screws while the pump is operating.

Ensure that the inlet and outlet of the pump are unblocked with foreign matter.

This pump must be equipotential bonded to local and national regulations.

WARNING:

- Fill the pump with water before starting. Do not run the pump dry. In case of dry run, mechanical seal will be damaged and the pump will start leaking.
- Before servicing the pump, switch power OFF to the pump by disconnecting the main circuit to the pump and release all pressure from pump and piping system.
- Never tighten or loosen screws while the pump is operating.
- Ensure that the inlet and outlet of the pump are unblocked with foreign matter.

CONTENTS

1 IMPORTANT SAFETY INSTRUCTIONS	2
2 TECHNICAL SPECIFICATIONS	4
3 OVERALL DIMENSION	4
4 INSTALLATION	4
4.1 Tools required	4
4.2 Pump location	5
4.3 Piping	5
4.4 Valve and fittings	5
4.5 Check before initial setup	5
4.6 Application conditions	5
5 SETTING AND OPERATION	6
5.1 Display on control panel	6
5.2 Startup	6
5.3 Self-priming	6
5.4 Running capacity setting	7
5.5 Timer mode	7
5.6 Skimmer mode	8
5.7 Parameter settings	8
6 WiFi FUNCTION	9
7 EXTERNAL CONTROL	14
7.1 Digital input	14
7.2 RS485	14
8 CONNECTING TO MADIMACK HEAT PUMP POOL HEATER	15
9 PROTECTION AND FAILURE	16
9.1 High temperature warning and speed reduction	16
9.2 Undervoltage protection	16
9.3 Troubleshooting	16
9.4 Error code	16
10 MAINTENANCE	17
11 DISPOSAL	17
12 WARRANTY	18

2 | TECHNICAL SPECIFICATIONS

MODEL	InverFlow Plus 1HP	InverFlow Plus 1.5HP	InverFlow Plus 2HP
SKU	20101	20102	20103
Power			
Voltage range	220~240 50/60Hz		
Total Horse Power (THP)	1	1.5	2
Input kilowatt (kW)	0.75	1.05	1.5
Running Amps (A)	3.5	4.6	6.5
Flow			
Qmax L/Min	367	425	517
Hmax - Metre	16	18	20.5
Flow @ 8m (L/min)	300	367	500
Flow @ 10m (L/min)	233	300	467
Specifications			
Dimensions LxWxH (mm)	544*252*288		
Pipe connections (mm)	40 & 50mm		
Noise level 30% Speed	35.4	35.4	36
Noise level 100% Speed	51.4	54.9	57.5
Packaging (mm)	610*255*348		

* Specifications displayed refer to 230v supply and can vary with voltage fluctuations please visit www.madimack.com for further specifications.
2 years warranty for product installed in commercial application

3 | OVERALL DIMENSION

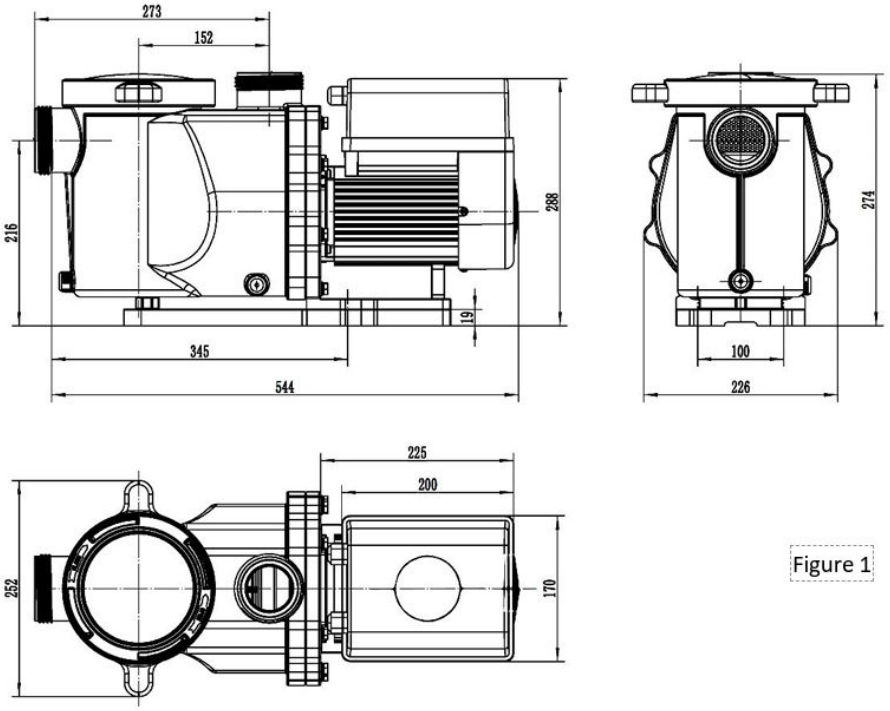

Figure 1

4 | INSTALLATION

1. Tools required

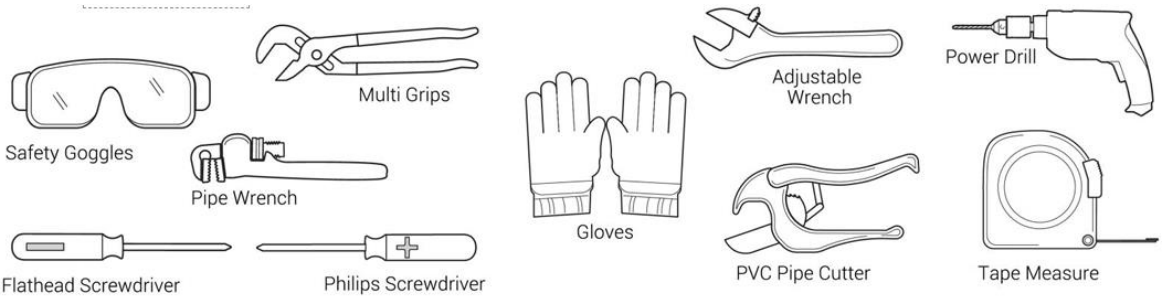

4.2 Pump Location

The pump should be installed in an area with at least 6” distance around the unit away from any obstacles and away from any corrosive products.

1) Install the pump as close to the pool as possible, to reduce friction loss and improve efficiency, use short, direct suction and return piping.
2) To avoid direct sunshine, heat or rain, it is recommended to place the pump indoors or in the shade.
3) DO NOT install the pump in a damp or non-ventilated location. Keep pump and motor at least 6” away from obstacles, pump motors require free circulation of air for cooling.
4) The pump should be installed horizontally and fixed in the hole on the support with screws to prevent unnecessary noise and vibration.

4.4 Valves and Fittings

It is recommended to install isolation valves on the suction and return lines for easier maintenance of the pool pump.
Elbows should be no closer than 14” to the inlet.
Do not install 90° elbows directly into the pump inlet/outlet.
Joints must be tight.

4.3 Piping

Suction and return connections on the pool pumps are 2” pressure pipe dimensions.

1) For optimization of the pool plumbing, it is recommended to use a pipe with size of 2”. When installing the inlet and outlet fittings Qoints),use the special sealant for PVC material.
2) The dimension of suction line should be the same or larger than the inlet line diameter, to avoid pump sucking air, which will affect the efficiency of the pump.
3) Plumbing on the suction side of the pump should be as short as possible.
4) For most installations we recommend installing a valve on both the pump suction and return lines, which is more convenient for routine maintenance. However, we also recommend that a valve, elbow, or tee installed on the suction line should be no closer to the front of the pump than seven times the suction line diameter
5) Pump outlet piping system should be equipped with a check valve to prevent the pump from the impact of medium recirculation and pump-stopping water hammer.

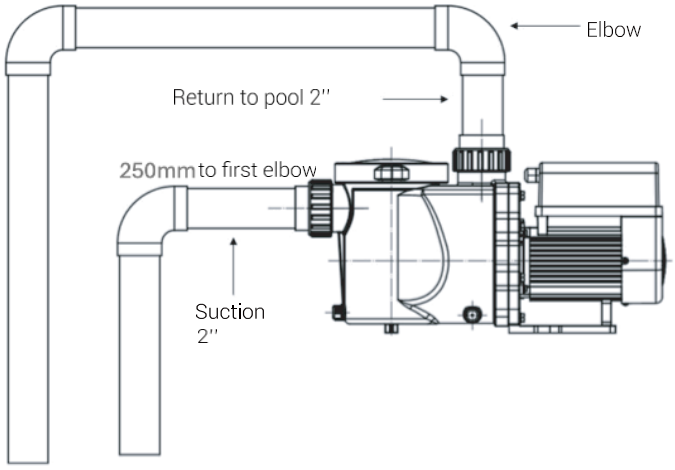

* The pump inlet/ outlet union size: optional with imperial 1.5” or 2”.

2) Below water level system should have an isolation valves installed on suction and return line for maintenance; however, the suction gate valve should be no closer than seven times the suction pipe diameter as described in this section.
3) A check valve should be installed if there are long pipe runs above water level or if is significant height between the return line and the outlet of the pump.
4) Be sure to install check valves when plumbing in parallel with other pumps. This helps prevent reverse rotation of the impeller and motor.

4.5 Check before initial startup

1) Check whether pump shaft rotates freely;
2) Check whether power supply voltage and frequency conform to the nameplate;
3) Facing the fan blade, the direction of motor rotation should be clockwise;
4) It is forbidden to run the pump without water.

4.6 Application Conditions:

Ambient Temperature	Installation temperature range 25.5°C - 40°C
Water Temperature	5°C - 50°C
Salt Pools	<6000ppm recommended
Humidity	≤90%RH,
Altitude	Not exceed 1000m
Priming	<2m
Insulation	Class F, IP55

5 | SETTING AND OPERATION

1. Display on control panel

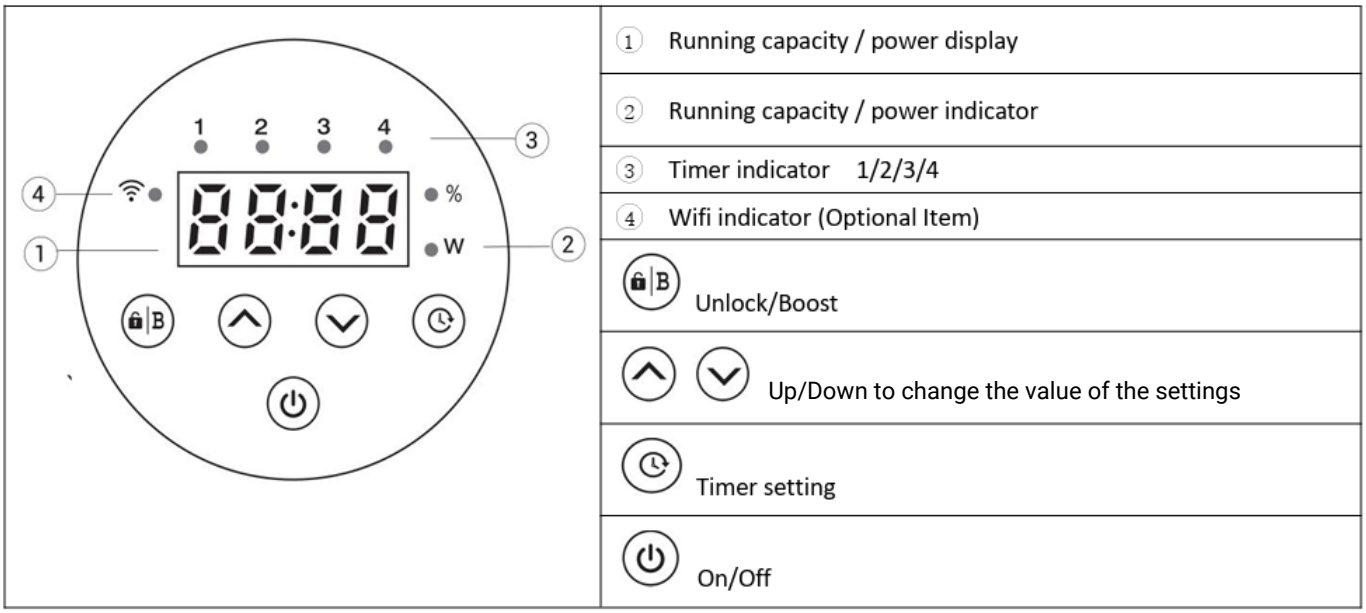

5.2 Startup

When the power is switched on, the screen will fully light up for 3 seconds, the device code will be displayed, and then it will enter the normal working state. When the screen is locked, only the button will light up; Press and hold. for more than 3 seconds to unlock the screen.

The screen will automatically lock up when there is no operation for more than 1 minute and the brightness of the screen will be reduced to 1/3 of the normal display. Short press to wake up the screen and observe the relevant operating parameters.

5.3 Self-priming

Each time the pump is started, it will start self-priming.

When the pump performs self-priming, it will count down start from 25mins display 00:25 and stop count down automatically when the system detects the pump is full of water, then the system will recheck for 2mins display 00:02 again to make sure the self-priming is completed.

User can exit self-priming manually by pressing for more than 3 seconds. The pump will run at the default 80% speed

Remark:

1) The pump is delivered with self-priming enabled. Each time the pump restarts, it will perform self-priming automatically. Users can enter the parameter setting to disable the default self-priming function in parameter 6(see 5.8)
2) Users can enter the parameter setting to adjust the self-priming recheck time in parameter 7 (see 5.8)

5.4 Running Capacity Setting

1		Hold for more than 3 seconds to unlock the screen.
2		Press to start. The pump will run at 80% of the running capacity at the initial startup after the self-priming.
3		Press or to set the running capacity between 30%~100%, each step by 5%. For the purpose of backwashing, users can set a high running capacity according to the size of filter.
4		Hold for more than 3 seconds to read the real-time power.

Note:

a. When the running capacity is adjusted, the system will save the latest parameter automatically.

b. When setting 100% speed, the pump will increase the speed automatically if the pipeline resistance is high, but will not exceed the rated power of each model.

5.5 Timer mode

The pump's on/off and running capacity could be commanded by timer, which could be programmed daily as needed. Maximum 4 timers can be set on the control panel.

1	Enter timer setting by pressing .
2	Press or to set the local time. Press to confirm and move to timer-1
3	When enter the timer-1 setting, the timer indicator 1 will light up. "StA"will be shown on the screen. Press to proceed and then press or to set the start time of timer-1 (with 30 minutes for each step), press to confirm.
4	When the start time of timer 1 is confirmed, "End"will be shown on the screen. Press to proceed and then press or to set the end time of timer-1 (with 30 minutes for each step), press to confirm.
5	When the end time of timer 1 is confirmed, "SPd"will be shown on the screen. Press to proceed and then press or to set the running capacity of timer-1 (30% - 100%, each step by 5%), press to confirm.
6	When the timer 1 setting is completed, repeat steps 3 – 5 to complete the setting of timer 2 – 4.

Note:

1). When timer mode is activated, if the set time period contains the current time, the pump will start running according to the set running capacity and the corresponding timer indicator (7 or 2 or 3 or 4) will stay on, and the set running capacity will be shown on the screen.

2).If the set time period does not contain the current time, the timer indicator (7 or 2 or 3 or 4) that is about to start running will light up and flash, and the current time will be shown on the screen.

3).All 4 time periods should be set in chronological order. Overlap setting of time will be considered invalid, the pump will only run based on the previous valid setting.

4).During the timer setting , if users want to return to the previous setting item, hold both for 3 seconds. If users don't need 4 timers, they can hold for 3 seconds after completing the setting of the specific timer, the system will automatically save the current set value and activate the timer mode.

5).When the timer mode is activated, users can adjust the running capacity for temporary use by pressing or until the set time period of the timer end.

1. If the set time period of the timer contains the current time, users can adjust the running capacity for temporary use by pressing or until the set time period of the timer end.
2. If the set time period of the timer does not contain the current time, users can adjust the running capacity for temporary use by pressing or until the next set time period of the timer start.

6).Users can hold for 3 seconds to read the real-time power and exit timer mode by holding for 3 seconds.

5.6 Boost mode

User can enter the Boost mode by short pressing . The pump will run at 100% speed for 1 hour (the speed can be modified in parameter setting 4, and the countdown will be displayed on the display. (see 5.8)

During operation, the user can adjust the running time (default 1 hour) by pressing both . The adjustment range is 00:00-24:00, and the step is 15 minutes. After adjustment, the system automatically saves the current value and operates according to the adjusted time, and the next time it enters the Boost mode, it will still run according to the last set time value.

When the countdown ends, or hold for 3 seconds, the boost mode will be exited and the pump wil return to the previous running state.

5.7 Skimmer mode

The skimmer mode enables the pump to skim the water surface, prevents the debris from accumulating, and provides users with a cleaner pool.

Hold and to enter the preset interface of the skimmer mode, press or to view the 3 presets, the selected preset will be

Activate Skimmer Mode:

1. Unlock the screen, press both for 3s to enter the preset interface of the skimmer mode;
2. Press or to select the presetting from 1-4, the selected presetting will be activated after 5s without operation.
3. When skimmer mode is activated, the controller will exit the preset interface and display normal running state.

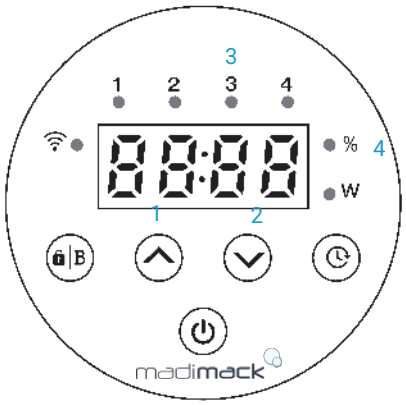

1. Skimmer cycle (hour)
2. Skimmer duration (minute)
3. Skimmer mode preset number
4. Skimmer speed

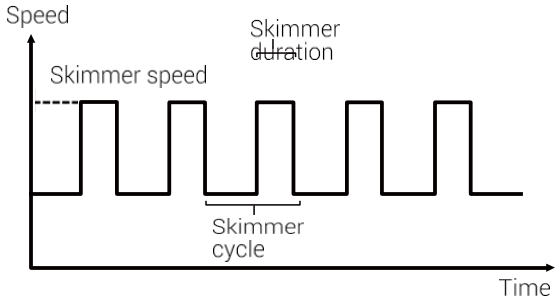

Details of the presetting:

Preset	Skimmer cycle	Skimmer duration	Skimmer speed	Time period	Remarks
1	1h	3 min	100%	7:00 - 21:00	Editable in parameter setting
2	1h	10 min	100%	7:00 - 21:00	Not editable
3	3h	3 min	80%	7:00 - 21:00	Not editable
4	Cancel the skimmer mode				Not editable

5.8 Parameter Setting

Restore factory setting.	Under off mode, hold both for 3 seconds.
Check the software version.	Under off mode, hold both for 3 seconds.
Enter parameter setting as shown.	Under OFF mode, hold both for 3 seconds to enter the parameter setting. The parameter address (on the left) and default setting value (on the right) will flash alternately on the screen. Users can press or to adjust the current value, and hold for 3 seconds to the next parameter address. It will exit the parameter setting after 10 seconds without operation.

Parameter Address	Description	Default Setting	Setting Range
1	Digital input 2	100%	30~100%, by 5% increments
2	Digital input 3	80%	30~100%, by 5% increments
3	Digital input 4	40%	30~100%, by 5% increments
4	Boost mode speed	100%	80~100%, by 5% increments
5	Reserve	/	/
6	Enable or disable the priming that occurs at start.	25	25:enables 0:disables
7	Self-primming recheck time	2min	1-15min by 1min increments
8	System time	00:00	Hour: 0-24h, step:1h Min: 0-59min, step 1min
9	Skimmer cycle time, execution time, execution speed (Preset 1)	01 : 00 00 : 03 100%	Cycle range : 1-24h, by 1h increments Execution time Range: 1-30min, by 1min increments execution time Range: 30%-100%, by 5% increments
10	Skimmer mode effective period (Preset 1)	07:00-21:00	Start time: hour: 0-24h, by1h; Minute: 0-59min, by 1min End time: hour: 0-24h, by 1h; Minute: 0-59min, by 1min
11	Speed limit	100%	60-100% in step of 5%
12	RS485 address	170 (0xAA	160-191(0xA0-0xBF), by 1increments
13	Reserve	)	/
		/	

1. Download Madimack APP

Android

ANDROID APP ON Google play

iOS

Available on the App Store

2. Account Registration

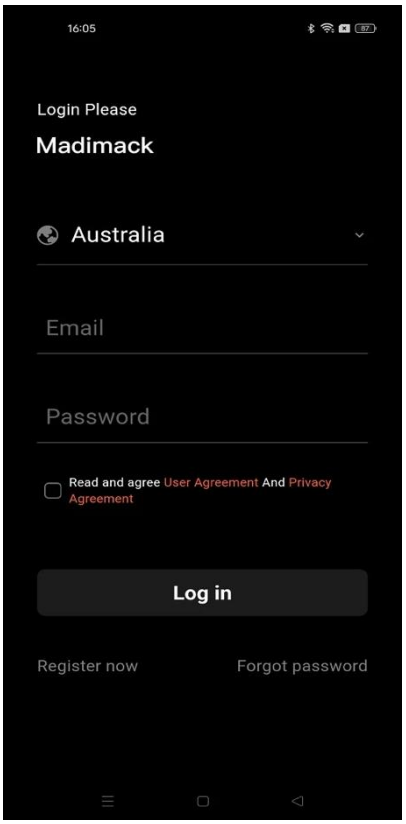

Phone / Email Registration

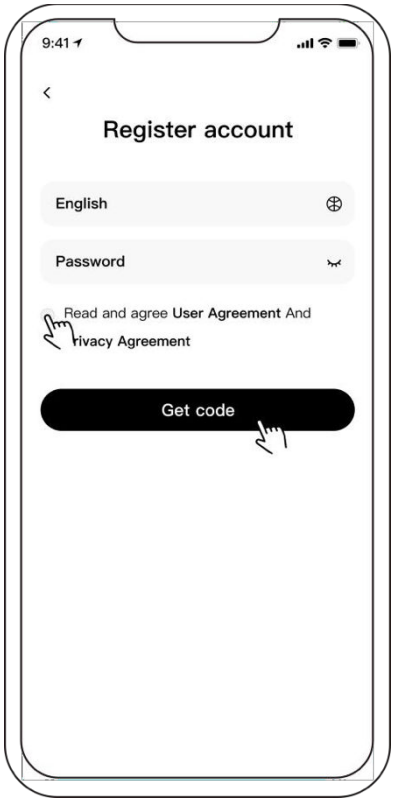

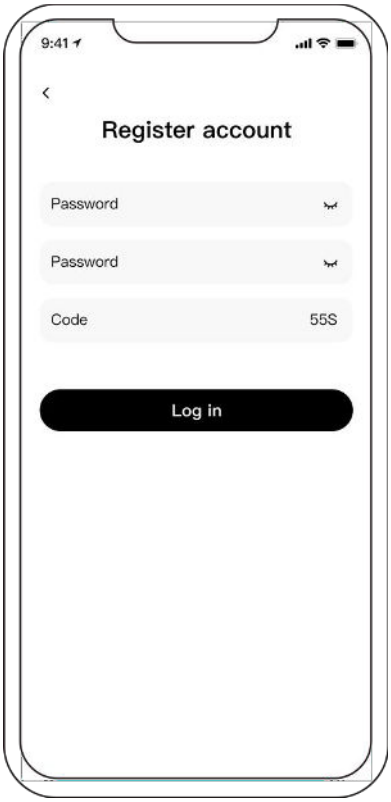

3. App Pairing

Please make sure your pump is turned on before you start.
(Network condition: 2.4GHz; 2.4Ghz and 5GHz combine into one SSID; but no separate 5GHz network)

1. Please confirm that your phone is connected to Wifi and the Bluetooth of your phone is ON.
2. Press. for 3 seconds to unlock the screen. After switching on the pump, press for 5 seconds until hearing “Beep” and then release. will flash.
3. Click “Add Device”, and then follow the instructions to pair device.

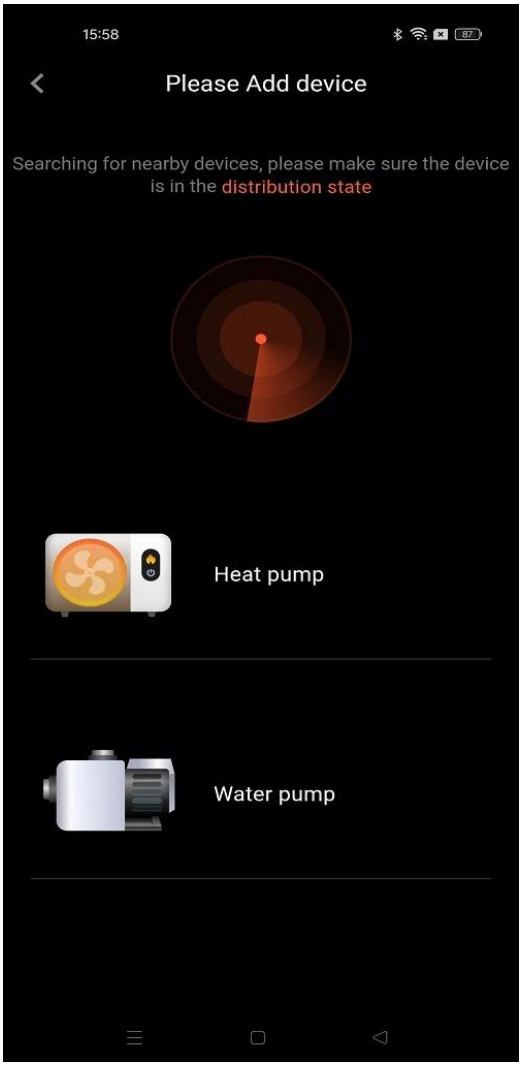

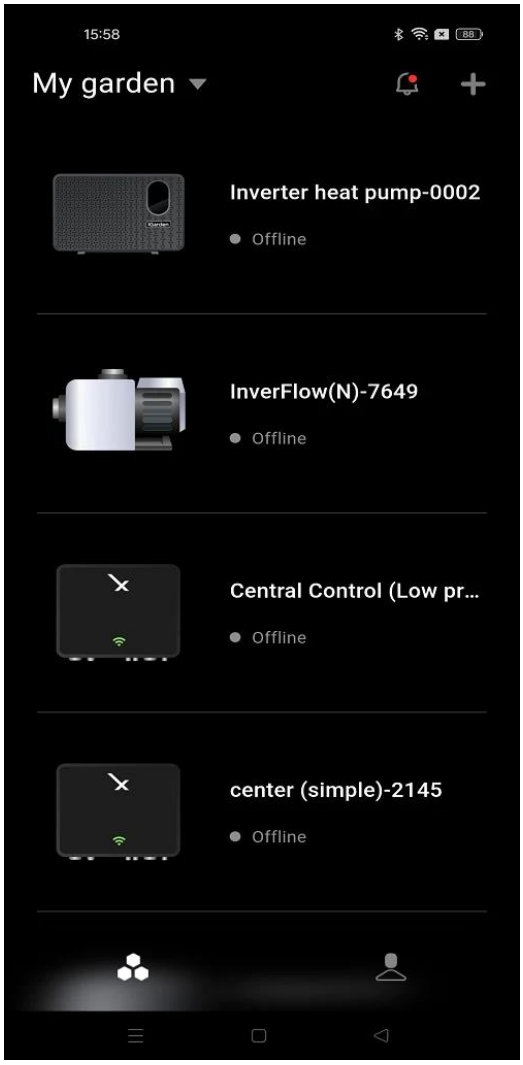

4. Operation

1) Manual Inverter mode（MI mode）:

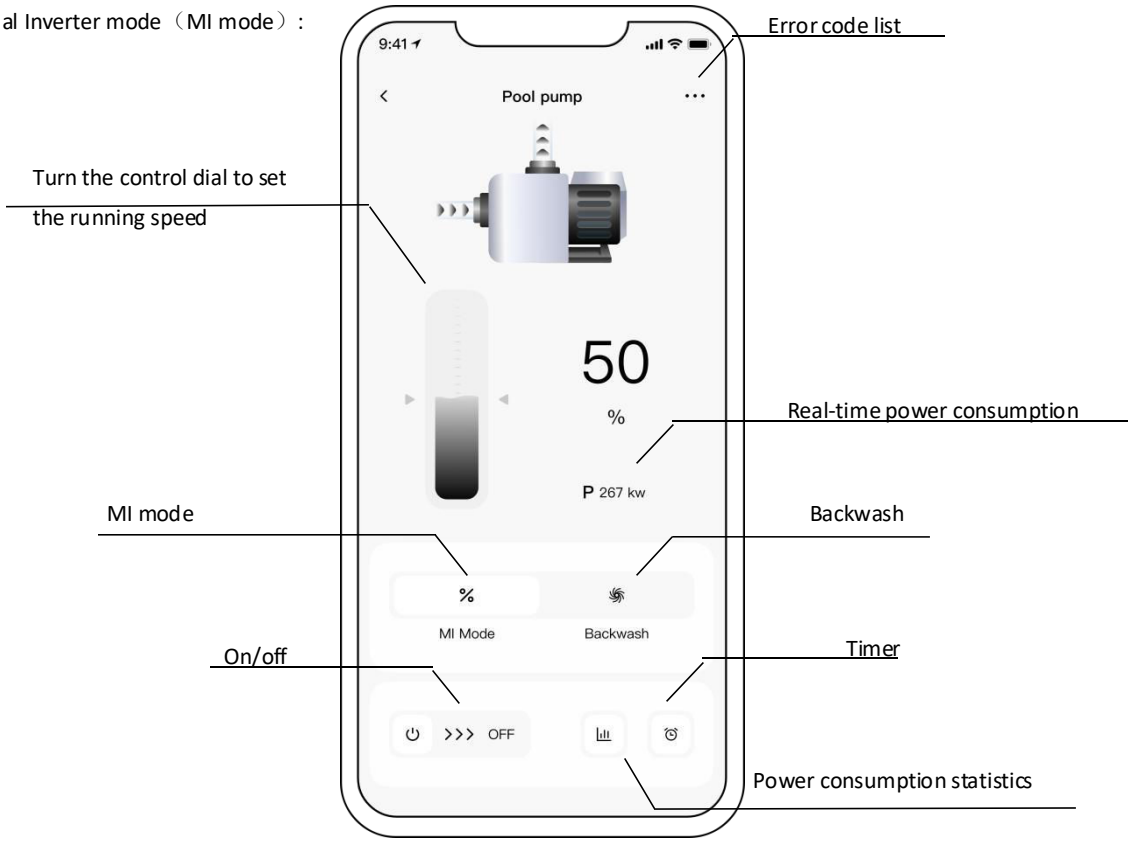

2) Backwash mode :

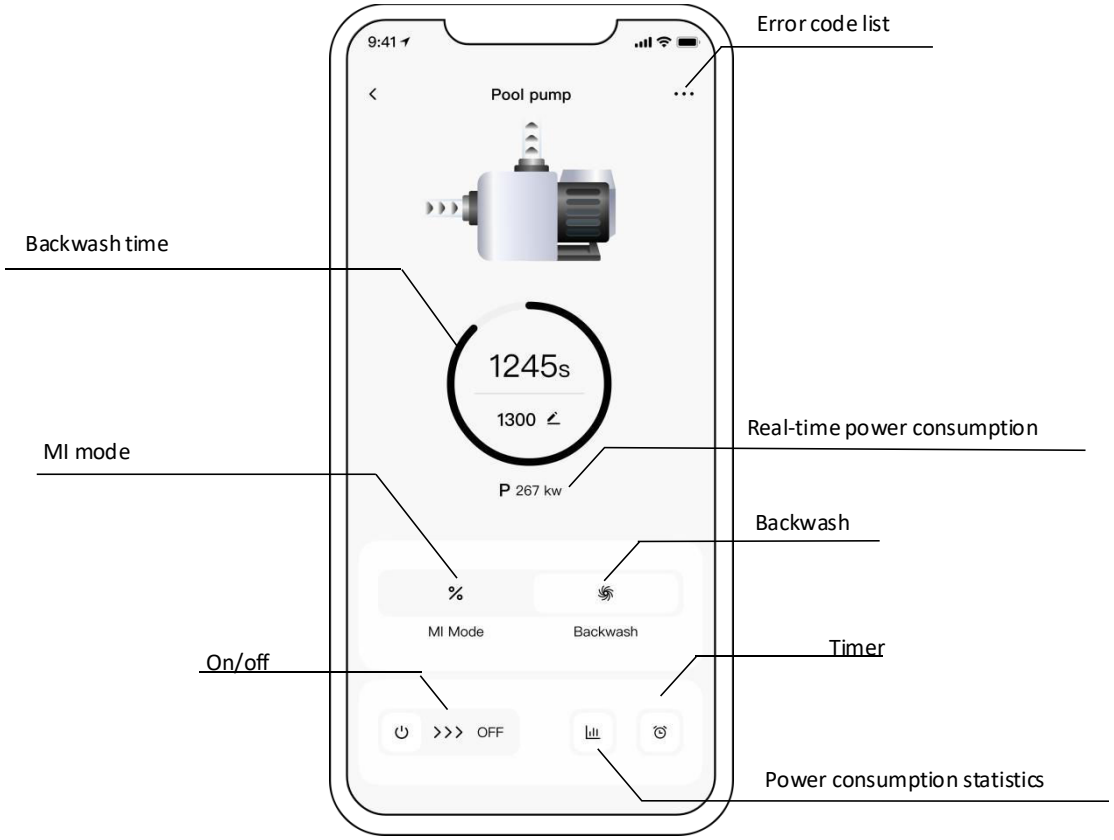

Notice for the timer setting via the APP:

1) Time variance is ±30s;

2) In order to avoid overlapping timing points conflicting and invalidating due to a network delay, it is recommended that the end time and the start time of the next timing period cannot overlap, and a sufficient time interval should be reserved, for example, at least 1-2 minutes;

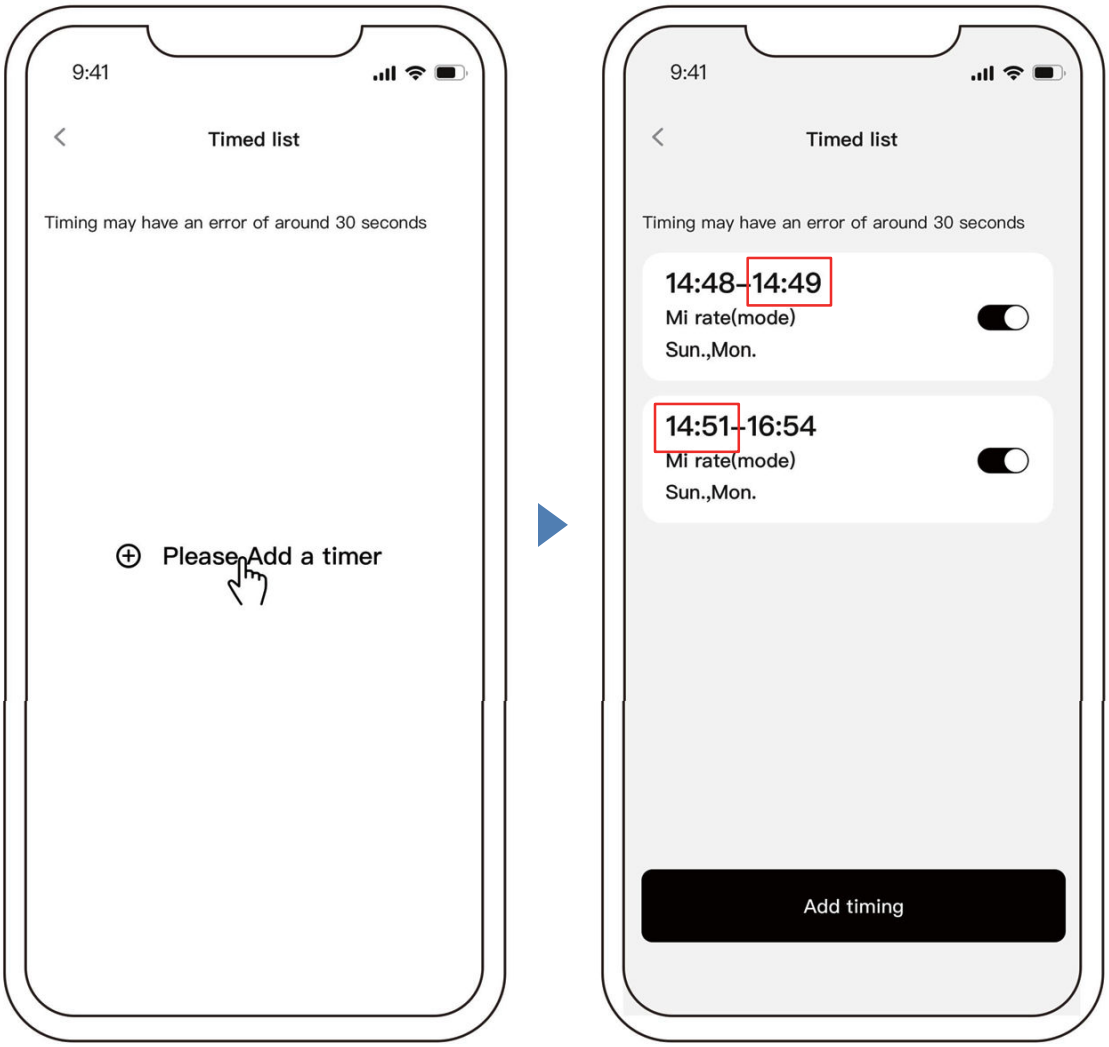

5. Sharing Devices with your family members

After pairing, if your family members also want to control the device, please let your family members register" iGarden" first, and then the adminstrator can operate as below:

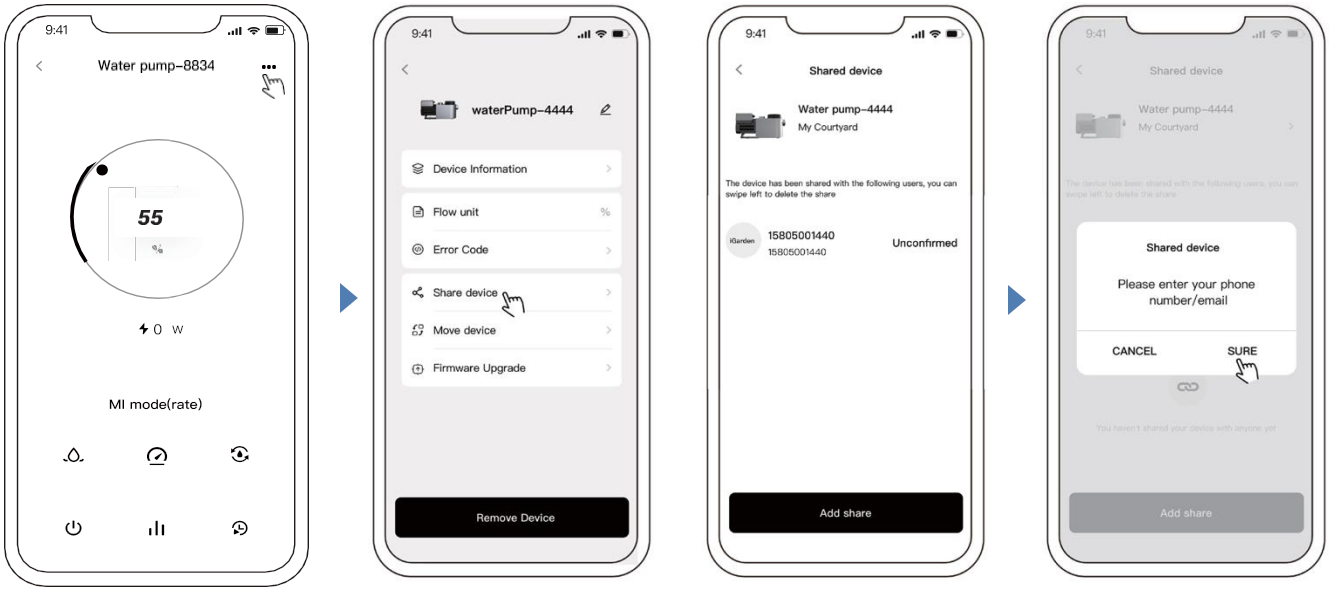

6. Feedback

If you have any problem while using, welcome to send feedback.

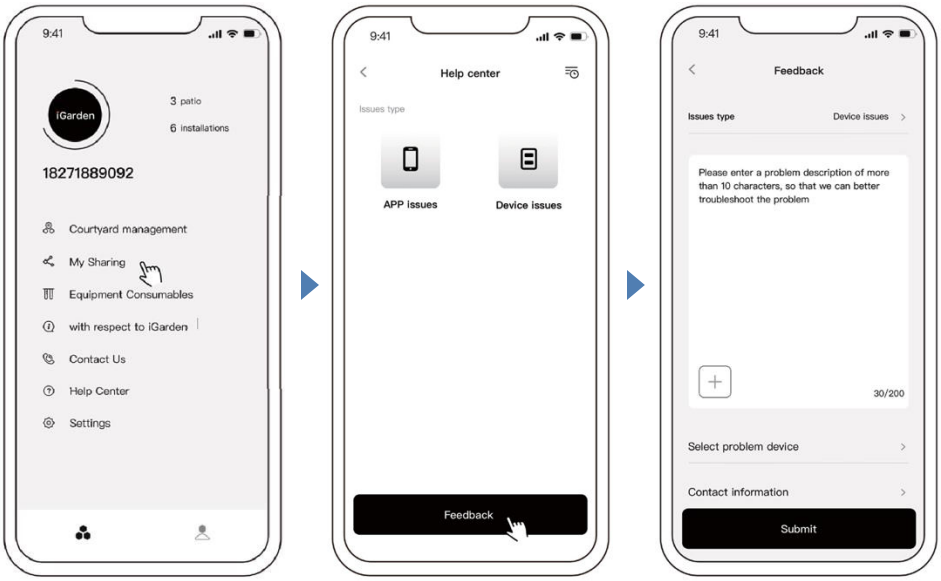

Notice:

1) Weather forecast is just for reference;
2) The power consumption data is for reference only, as it may be affected by network problems and imprecision of the calculation.
3) App is subject to updates without notice.

7 | EXTERNAL CONTROL

External control can be enabled via following contacts. If more than one external control is enabled, the priority is as below: Digital Input>RS485 > panel.

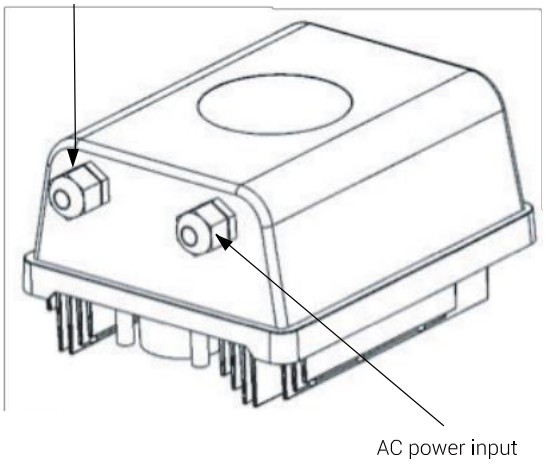

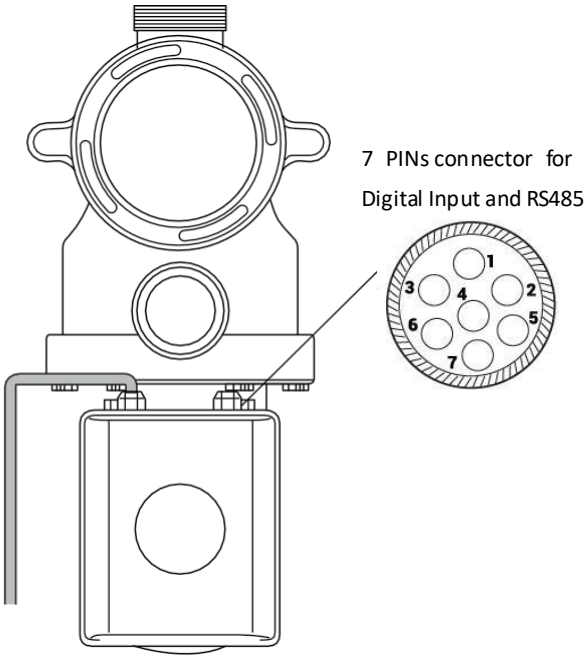

Color	Description	Setting Range	Default Setting
White	Digital Input 2	30-100%, by 5% increments	100%
Black	Digital Input 3	30-100%, by 5% increments.	80%
Red	Digital Input 4	30-100%, by 5% increments	40%
Grey	Digital Input 1	30-100%, by 5% increments	100%
Yellow	Digital Ground		COM
Green	RS 485-A		
Brown	RS 485-B		

1. Digital inputs

- Running capacity is determined by the state of the active Digital Input
  - i.e. When Digital Input 2 is active, the pump will be forced to run at 100% (default).
- Digital Input 1 (grey+yellow) speed can be set directly on the controller while active.
- Digital Inputs 2, 3 & 4 speeds can be adjusted in the parameter menu (1, 2 & 3).

Note:

- When no digital inputs are active, the pump display will return to last known state and manual control through on board controller settings.

2. RS485

To connect with RS485-A and RS485-B, the pump could be controlled via Modbus 485 communication protocol.

8 . CONNECTING TO MADIMACK HEAT PUMP POOL HEATER

How to connect: *Only available on late 2022 Madimack models.*

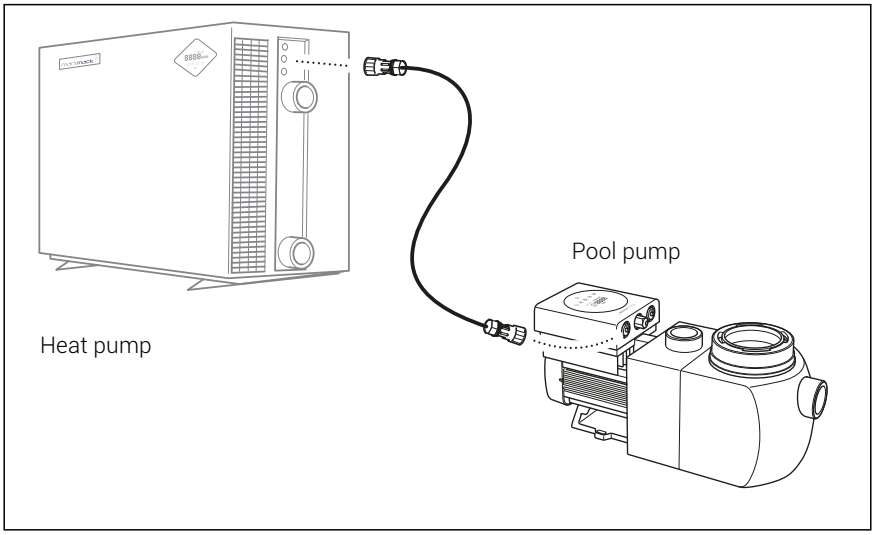

Socket

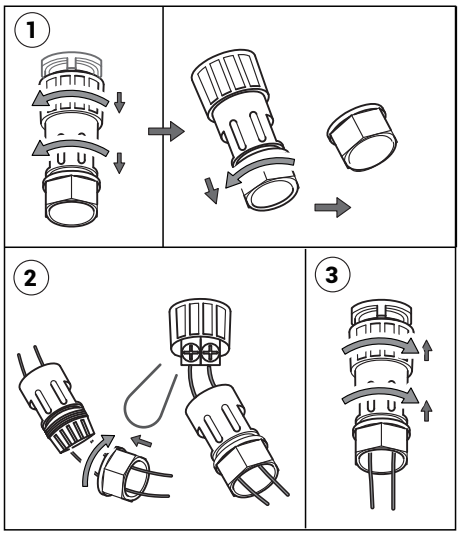

Adaptive Flow - Perfect Pairing with Madimack Pool Heat Pump

The Perfect Pairing uses the intelligent communicaiton functions of the pool heat pump to activate the speed required for the pool pump ensuring the most efficient solution for your pool and equipment.

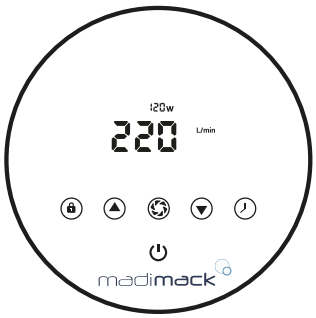

1. Switch pump off with ⏻ so only power symbol is illuminated.
2. Press and hold ▲ and ▼ arrows for 4 seconds on until "⁞" is displayed.
3. Use the ▲ or ▼ arrow whilst on "⁞" to adjust to the bottom number (**L/min**) optimum stated on the table on the right side.

Pool Heater kW size	Optimum Flow rate L/min
9-16	83
17-20	100
21-24	133
25-28	150
29-32	183
33-36	200
37-40	283

Note:
Communication cable '20031' is default wired for Di-1. This allows setting the 'heat pump' operating speed directly on the pump controller, without using parameter menu.
• While the digital input is active, the UP and DOWN buttons are setting the Di1 Active speed
• While the digital input is not active, the UP and DOWN buttons are setting the pump (standard filtration) speed

CUSTOMIZED SOCKET

P1/P2:
Sticker "Pump Output E.L.V"

5/6：
Sticker "Control Input"

Use the "Pump Output ELV" socket to connect to plug on water pump.

9 | PROTECTION AND FAILURE

1. High Temperature Warning and Speed Reduction

During normal operation (except backwash/self-priming), when the pump control system reaches the high temperature warning trigger threshold (81°C), it enters the high temperature warning state; when the temperature drops from the high temperature warning release threshold (22.5°C), the high temperature warning state is released. The display area alternately displays AL0l and running speed.

1) If AL0l displayed for the first time, the running capacity will be automatically reduced as below:
a. If current operating capacity is higher than 85%, the running capacity will be automatically reduced by 15%;
b. If current operating capacity is higher than 70%, the running capacity will be automatically reduced by 10%;
c. If current operating capacity is lower than 70%, the running capacity will be automatically reduced by 5%.

2) Suggestion for non-first displayed of AL0l: check the module temperature every 2 minutes. Compared with the temperature in the previous period, for every 1-degree Celsius increase, the speed will decrease by 5%.

9.2 Undervoltage protection

1)When pump is running under 230V:
When the device detects that the input voltage is less than 197V, the device will limit the current running speed.
When input voltage is less than or equal to 180V, the running capacity will be limited to 70%;
When the input voltage range is within 180V ~ 190V, the running capacity will be limited to 75%;
When the input voltage range is within 190V ~ 197V, the running capacity will be limited to 85%.
The display area alternately displays AL02 and running speed.

2) When pump is running under 115V:
When the device detects that the input voltage is less than 98V, the device will limit the current running speed.
When input voltage is less than 85V, pump will stop running automatically and display the Error code E00l;
When the input voltage range is within 85V ~ 90V, the running capacity will be limited to 75%;
When the input voltage range is within 90V ~ 98V, the running capacity will be limited to 85%.
The display area alternately displays AL02 and running speed

9.3 Troubleshooting

Problem	Possible causes and solution
Pump does not start.	• Power Supply fault, disconnected or defective wiring. • Fuses blown or thermal overload open. • Check the rotation of the motor shaft for free movement and lack of obstruction. • Because of long time lying idle. Unplug the power supply and manually rotate motor rear shaft a few times with a screwdriver.
Pump does not prime.	• Make sure the pump basket is filled with water and the O-ring of cover is clean. • Loose connections on the suction side. • Strainer basket or skimmer basket loaded with debris. • Suction side clogged. • Distance between pump inlet and liquid level is higher than 2m, height of pump installation should be lowered.
Low Water Flow.	• Pump does not prime. • Air entering suction piping. • Basket full of debris. • Inadequate water level in pool.
Pump being noisy	• Air leak in suction piping, cavitation caused by restricted or undersized suction line or leak at any joint, low water level in pool, and restricted discharge return lines. • Vibration caused by improper installation, etc. • Damaged motor bearing or impeller (need to contact the supplier for repair).

10 | MAINTENANCE

Empty the strainer basket frequently. The basket should be inspected through the transparent lid and emptied when there is an evident stack of rubbish inside. The following instructions should be followed:

1) Disconnected the power supply.
2) Unscrew the strainer basket lid anti-clockwise and remove.
3) Lift up the strainer basket.
4) Empty the trapped refuse from the basket, rinse out the debris if necessary.

Note: Do not knock the plastic basket on a hard surface as it will cause damage

5) Inspect the basket for signs of damage, replace it.
5). Check the lid O-ring for stretching, tears, cracks or any other damage
7). Replace the lid, hand tightening is sufficient.

Note: Periodically inspect and clean the strainer basket will help prolong its life.

11 | DISPOSAL

Observe all safety and warning information during installation and operation.

DISPOSAL CONSIDERATIONS
The transport and protective packaging has been selected from materials which are environmentally friendly for disposal, and can normally be recycled. Recycling the packaging reduces the use of raw materials in the manufacturing process and also reduces the amount of waste in landfill sites. Ensure that any plastic wrappings, bags etc. are disposed of safely and kept out of the reach of babies and young children. Danger of suffocation.

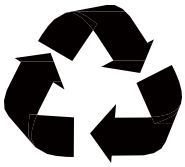

DISPOSING OF YOUR ELECTRICAL PRODUCT
Electrical devices marked with this label may not be disposed of in domestic waste at the end of their service life.

Electrical and electronic appliances often contain valuable materials. They also contain specific materials, compounds and components, which were essential for their correct function and safety. These could be hazardous to human health and to the environment if disposed of with your domestic waste or if handled incorrectly. Please do not, therefore, dispose of your old appliance with your household waste.

Please dispose of those materials by contacting your local authorities and ask for the correct method of disposal. Please ensure that your old appliance poses no risk to children while being stored prior to disposal. By disposing of this product in accordance with the regulations, you protect the environment and the health of -those around you from negative consequences.

Limited Warranty

Standard Conditions: Madimack Pty Ltd (Australia) provide the following limited warranties. This warranty gives you specific legal rights, and you may also have other rights which vary from state to state or province to province.

IMPORTANT - Full Terms and Durations:
For a complete list of warranty periods and product-specific terms, please visit the warranty section at www.madimack.com

Statutory Rights: This document sets forth the comprehensive terms and conditions governing the warranty provided by Madimack. These terms are in addition to, and not a modification of or subtraction from, the statutory warranties and other rights and remedies contained in applicable local legislation, including the Australian Consumer Law where applicable.

Limited Warranty Coverage: Please visit www.madimack.com for full duration and product-specific terms. Madimack will, at its discretion, repair or replace any product proven to be defective in materials or manufacture during the warranty period. This warranty applies to domestic installations only, is personal to the original purchaser, and is non-transferable.

Exclusions: To the extent permitted by law, Madimack excludes all statutory or implied conditions and warranties. Madimack shall not be liable for any incidental or consequential damages (such as water loss or damage to surrounding structures). The following exclusions apply:

- Incorrect installation or operation resulting from failure to follow provided instructions.
- Damage caused by misuse, neglect, or "acts of God."
- Repairs or servicing performed by unauthorized dealers.
- Faults caused by the use of non-specified accessories or chemicals.
- General wear and tear of consumable items (e.g., seals, O-rings).

Procedure for Warranty Claims:

1. Initial Contact: Owners must contact Madimack via the online portal at www.madimack.com or the support numbers listed below.
2. Remote Troubleshooting: A service agent will attempt to resolve the issue via phone or email.
3. Service Type Determination:
    a. Return-to-Base: For portable or shippable units, you are responsible for disconnecting and transporting the product to an authorized service center. You are responsible for all freight and insurance costs to and from the supplier.
    b. On-Site Service: For fixed equipment, Madimack may coordinate an on-site technician. You are responsible for providing clear and safe access to the unit.
    c. Labor & Removal: You are responsible for the costs of removing the defective product and reinstalling the repaired/replacement product.

Required Documentation: All claims must include:

1. Proof of original purchase (Invoice with owner name and address).
2. A "Goods Return Authorization" or Service Ticket number provided by Madimack.

Australia
+61 1300 899 737
support@madimack.com
https://madimack.com/au

madimack